AFT-600x900

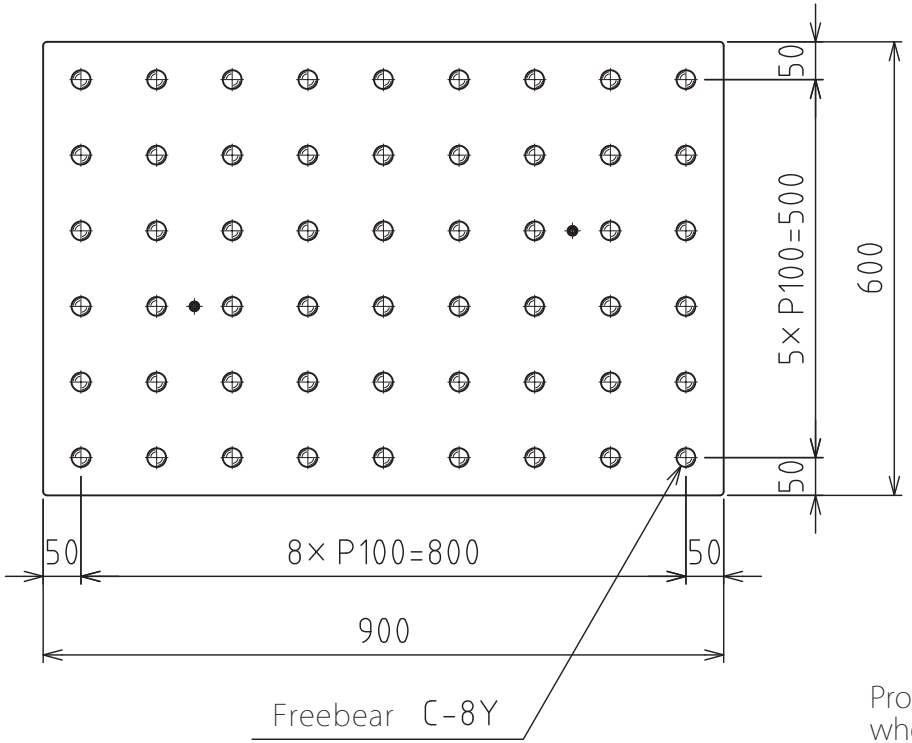

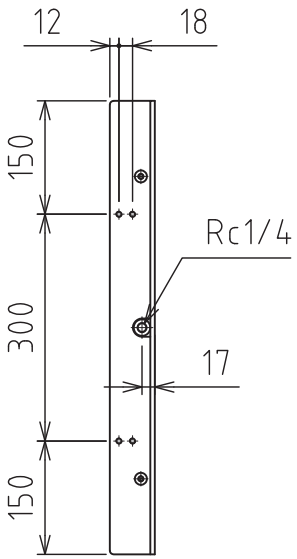

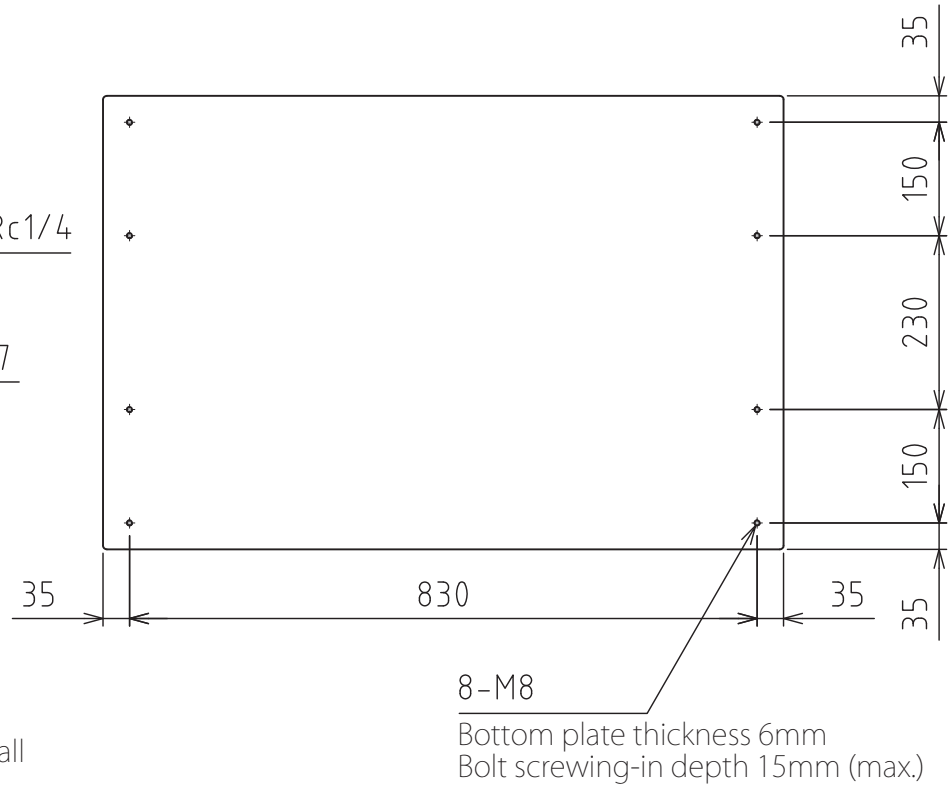

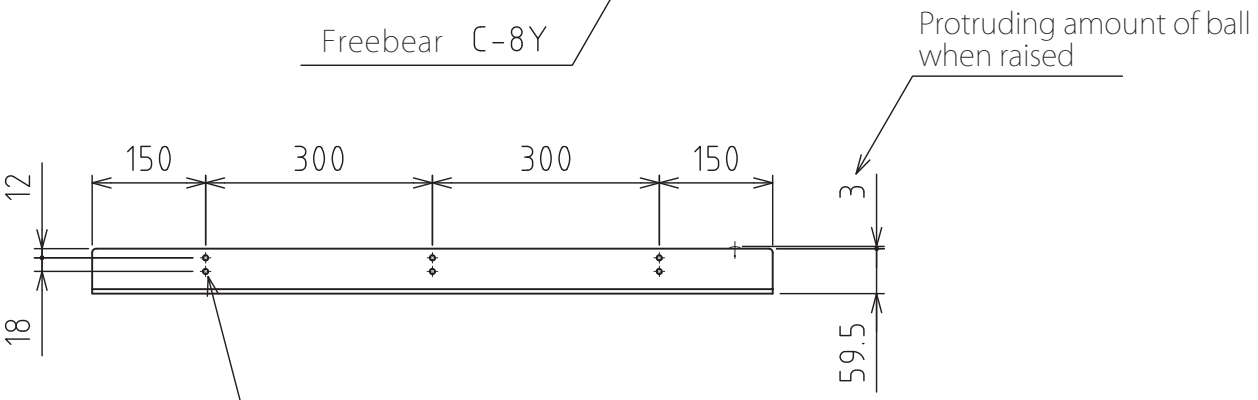

※The guide can be mounted on four sides respectively

Freebear：C-8Y (54pcs.)
Load capacity：500kg
Recommended air pressure：0.5MPa (5.1kgf/cm^2)
Weight：90kg

FREEBEAR®