AFT-6

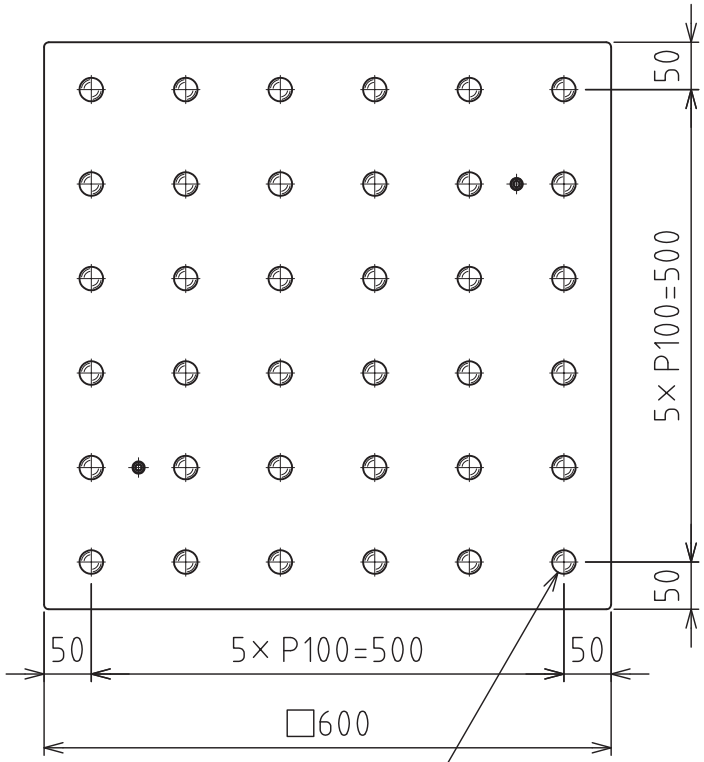

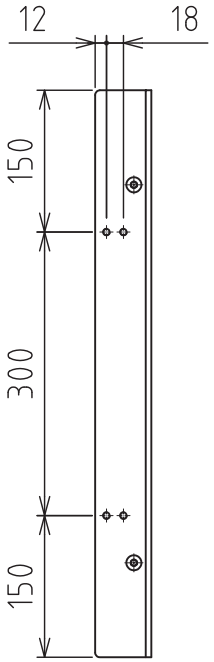

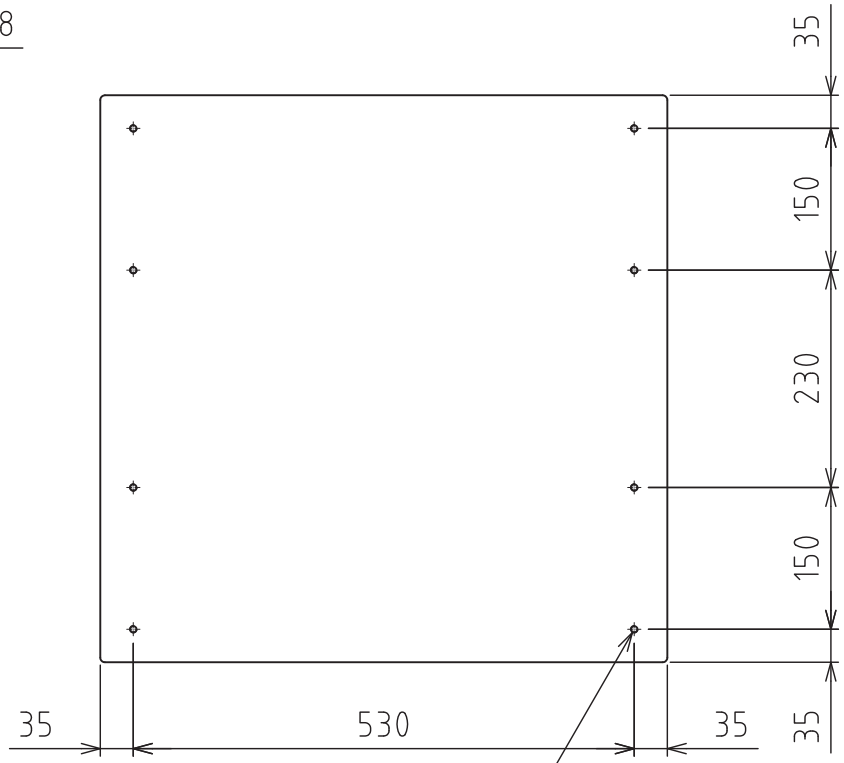

Freebear C-8Y

8-M8
Bottom plate thickness 6mm
Bolt screwing-in depth 15mm (max.)

Protruding amount of ball when raised

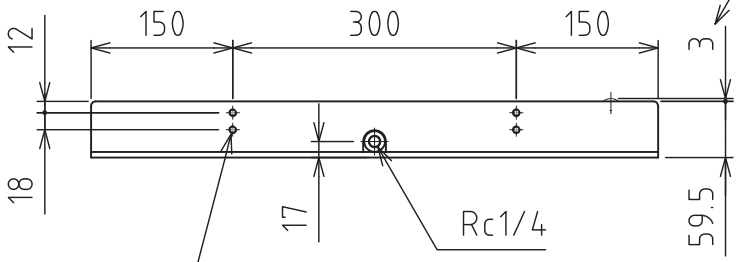

16-M8
(for mounting the fixed guide and removable guide)

※The guide can be mounted on four sides respectively

Freebear：C-8Y (36pcs.)
Load capacity：500kg
Recommended air pressure：0.5MPa (5.1kgf/cm^2)
Weight：64kg

FREEBEAR®