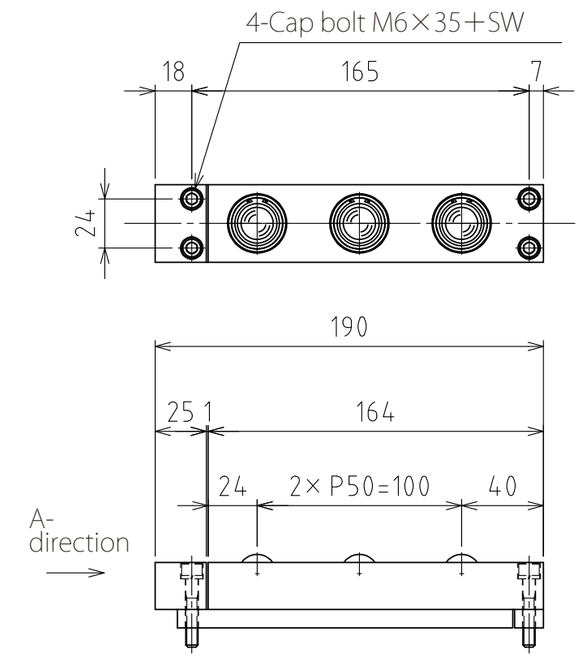

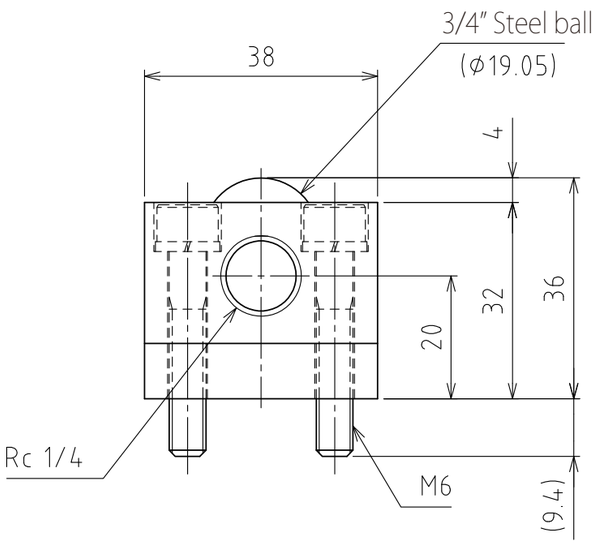

View A

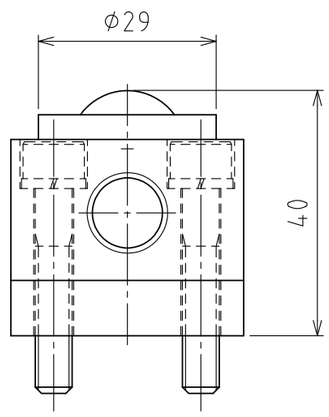

Rising
(stroke 4mm)

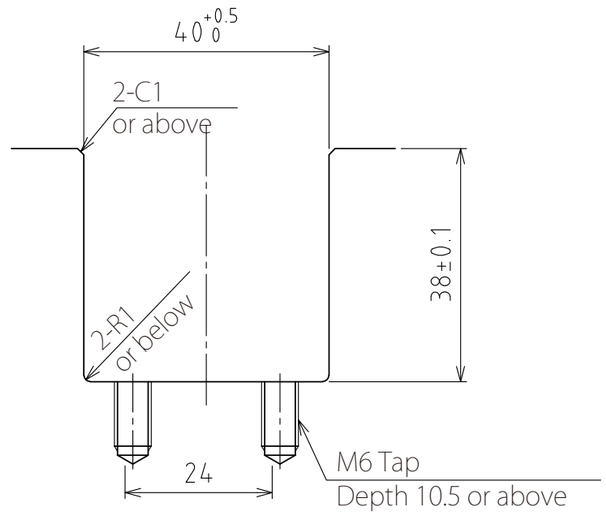

Recommended groove dimensions

(Scale 1:1)

spec

Series		AFU-3836 series
Freebear		3pcs
Material	Ball	SUJ2
	Ball seat	SCM415
	Body	Steel
Weight		1.7kg

	Air pressure [MPa(kgf/cm²)]	Load capacity (Unit) [kN(kgf)]	Load capacity (One freebear) [kN(kgf)]
Capacity	0.3 (3.1)	0.59(59.7)	0.20(19.9)
	0.4 (4.1)	0.72(73.4)	0.24(24.5)
	0.5 (5.1)	0.93(94.8)	0.31(31.6)
	0.6 (6.1)	1.17(119.3)	0.39(39.8)

設計 DESIGNED BY	古内	2021/07/28	名称 TITLE Pneumatically Actuated freebear unit
製図 DRAWN BY	古内	2021/07/28	
検図 CHECKED BY	技術部 '21.11.15 坂根	承認 APPROVED BY	技術部 21.11.24 花村
尺度 SCALE 1:3	サイズ SIZE A3		AFU-3836-4P-3
第三角法			
FREEBEAR		図面番号 DRAWING NO. SD-01354-F01	変更回数 REV.MARK