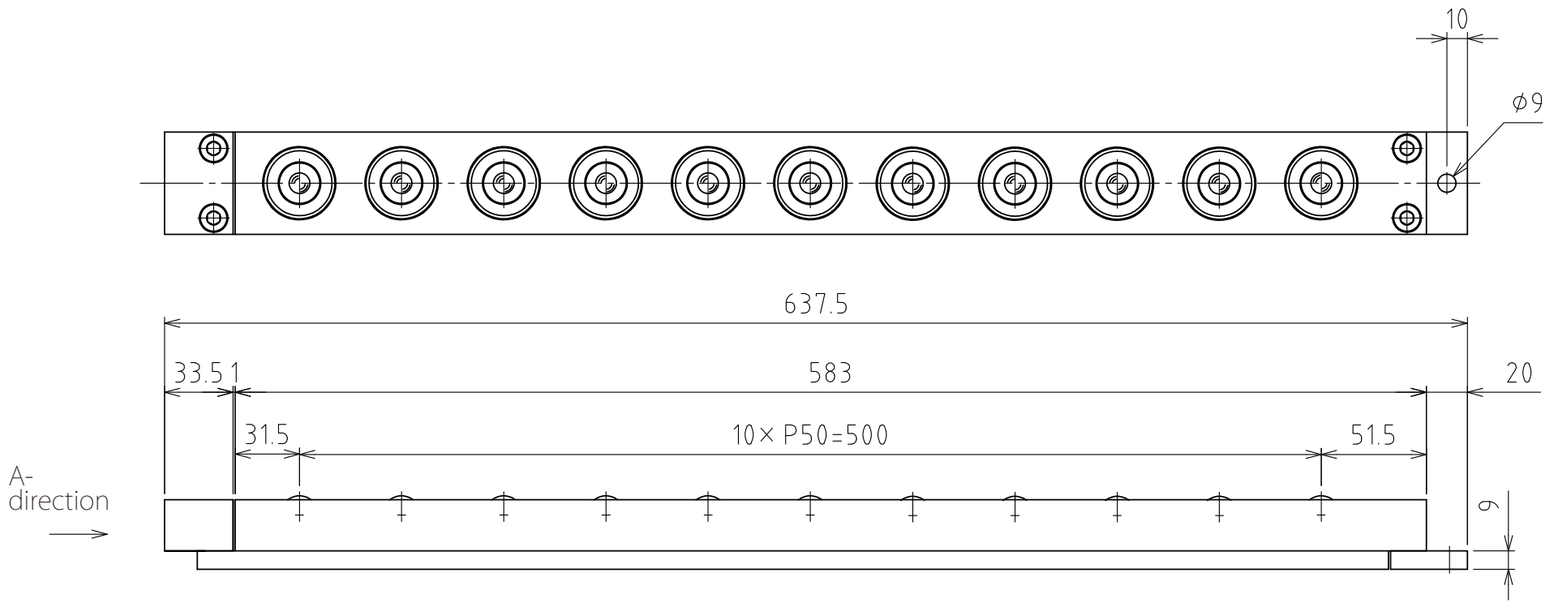

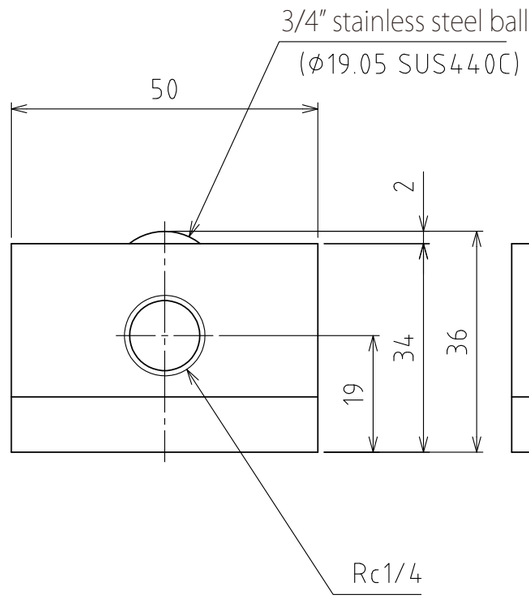

View A

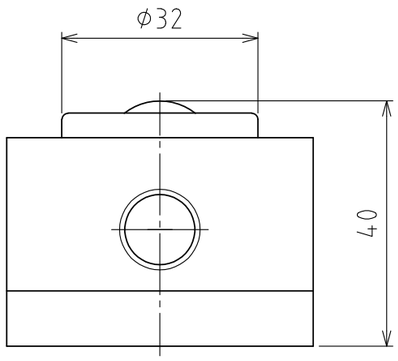

Rising
(stroke 4mm)

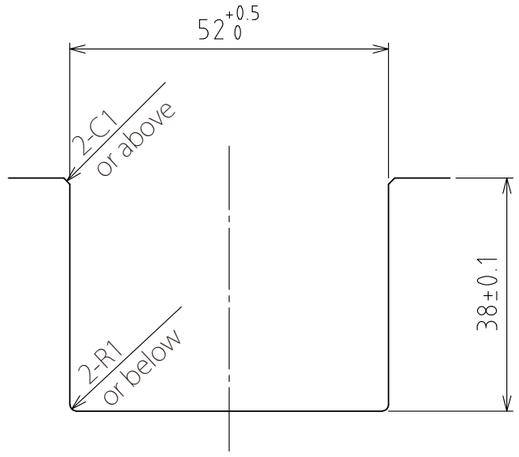

Recommended groove dimensions

(Scale 1:1)

spec

Series		AFU-5036M series
Freebear		11pcs
Material	Ball	SUS440C
	Ball seat	SUS440C
	Body	Steel (Electroless nickel-plating)
Weight		6.8kg

	Air pressure [MPa(kgf/cm²)]	Load capacity (Unit) [kN(kgf)]	Load capacity (One freebear) [kN(kgf)]
Capacity	0.3 (3.1)	2.15(218.8)	0.20(19.9)
	0.4 (4.1)	2.64(269.2)	0.24(24.5)
	0.5 (5.1)	3.41(347.7)	0.31(31.6)
	0.6 (6.1)	4.29(437.5)	0.39(39.8)

設計 DESIGNED BY	古内 2021/07/28	名称 TITLE	Pneumatically Actuated freebear unit
製図 DRAWN BY	古内 2021/07/28		
検図 CHECKED BY	技術部 '21.11.18 坂根	承認 APPROVED BY	技術部 21.11.26 花村
尺度 SCALE	1:3	サイズ SIZE	A3
第三角法		AFU-5036M-11	
FREEBEAR		図面番号 DRAWING NO.	SD-01292-F01
		変更回数 REV.MARK	