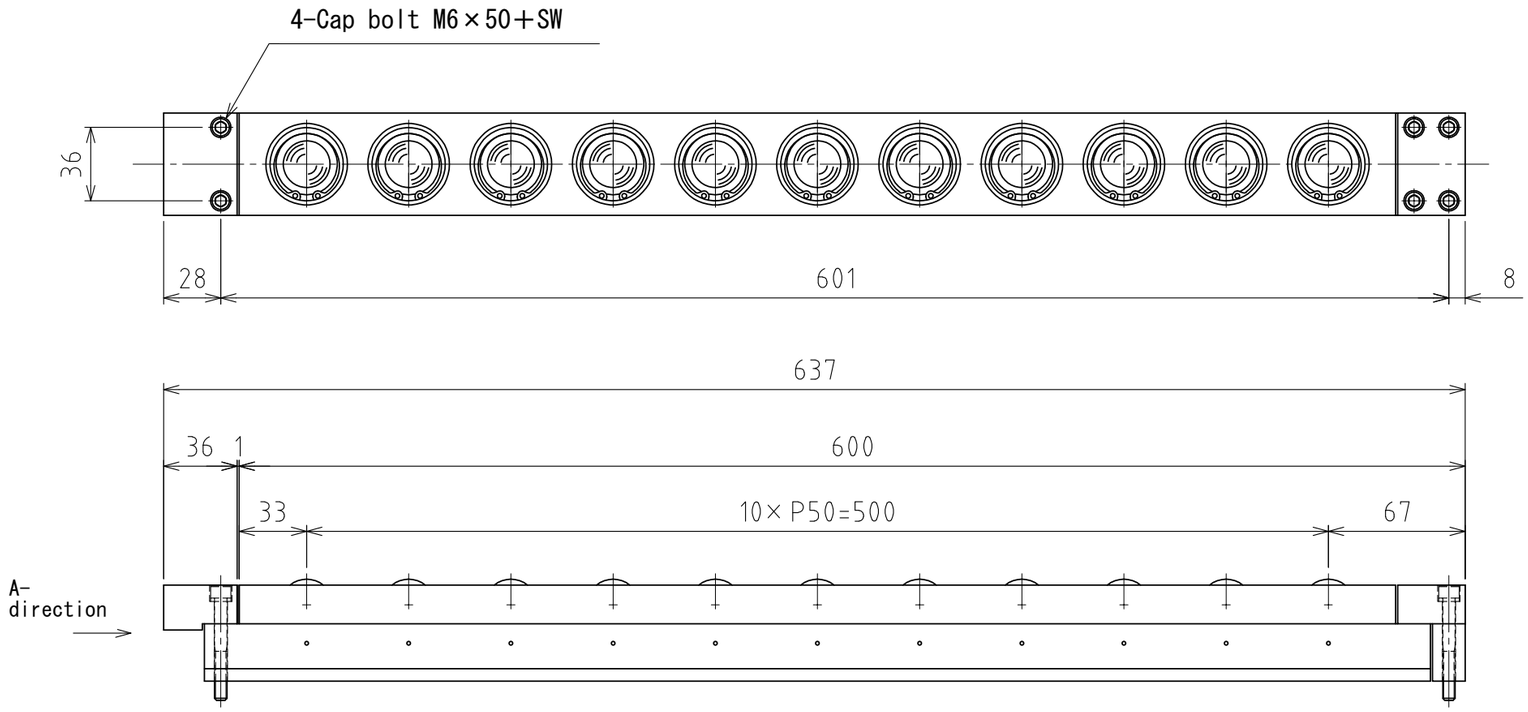

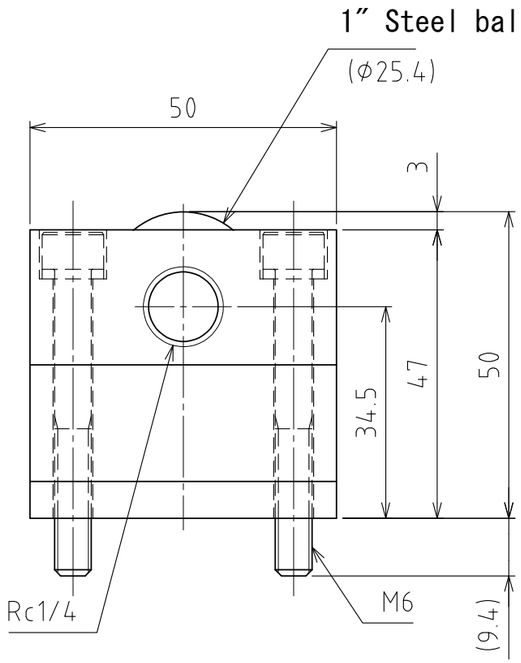

View A

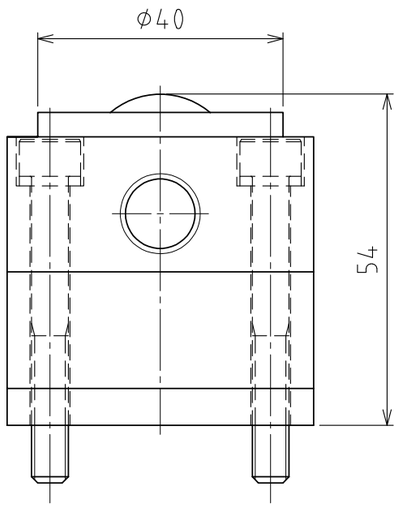

Rising
(stroke 4mm)

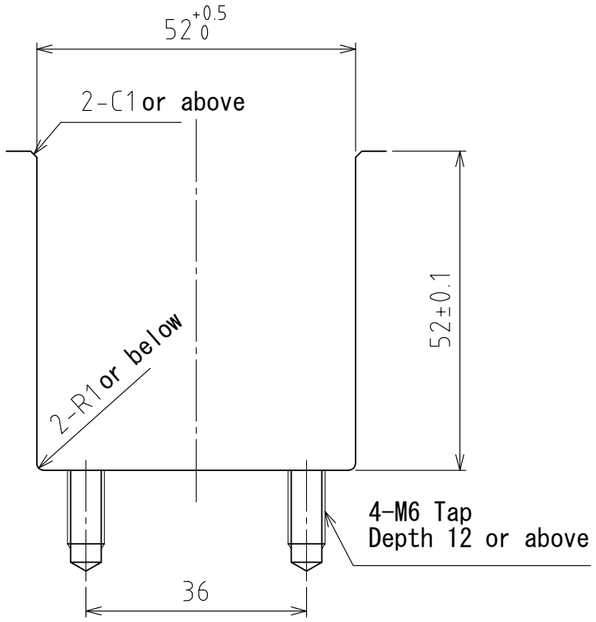

Recommended groove dimensions

(Scale 1 : 1)

spec

Series		AFU-5050W series
Freebear		11pcs
Material	Ball	SUJ2
	Ball seat	SCM415
	Body	Steel
Weight		9.7kg

	Air pressure [MPa(kgf/cm²)]	Load capacity (Unit) [kN(kgf)]	Load capacity (One freebear) [kN(kgf)]
Capacity	0.3 (3.1)	8.42(858.1)	0.77(78.0)
	0.4 (4.1)	11.22(1144.1)	1.02(104.0)
	0.5 (5.1)	14.08(1435.8)	1.28(130.5)
	0.6 (6.1)	16.83(1716.2)	1.53(156.0)

設計 DESIGNED BY	古内	2021/07/29	名称 TITLE Pneumatically Actuated freebear unit
製図 DRAWN BY	白川	2023/12/01	
検図 CHECKED BY	技術部 23.12.04 花村	承認 APPROVED BY	技術部 '23.12.04 坂根
尺度 SCALE 1:3	サイズ SIZE A3		AFU-5050W-4P-11
第三角法			
FREEBEAR		図面番号 DRAWING NO. SD-01398-F02	変更回数 REV.MARK