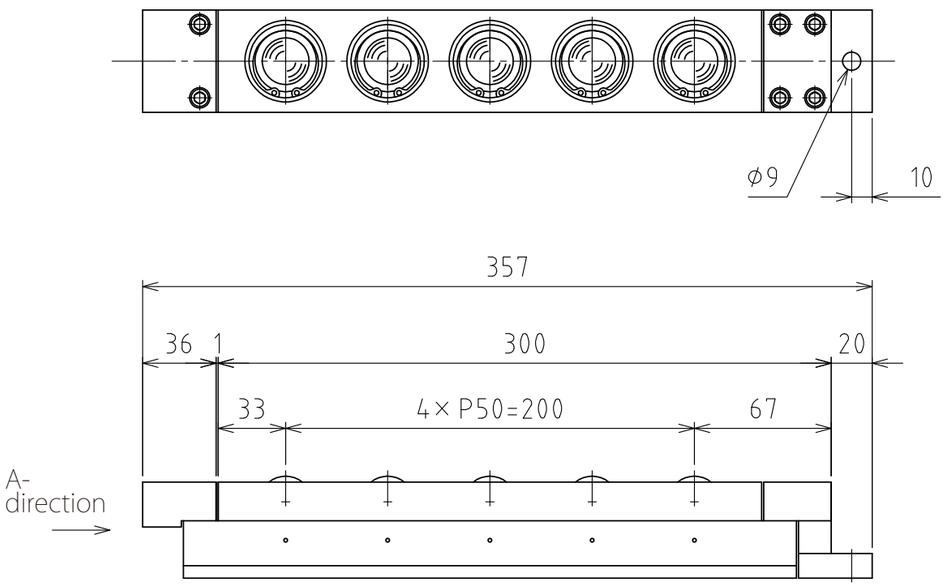

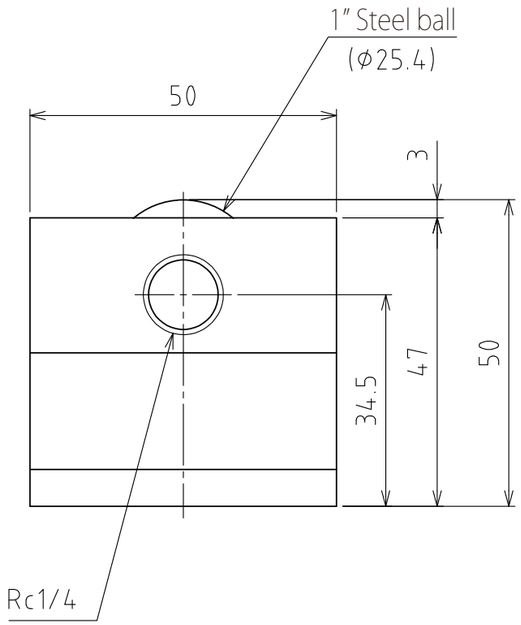

View A

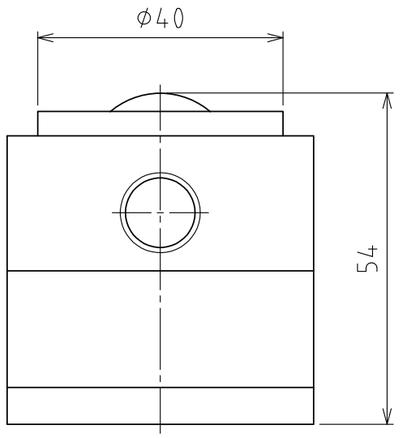

Rising
(stroke 4mm)

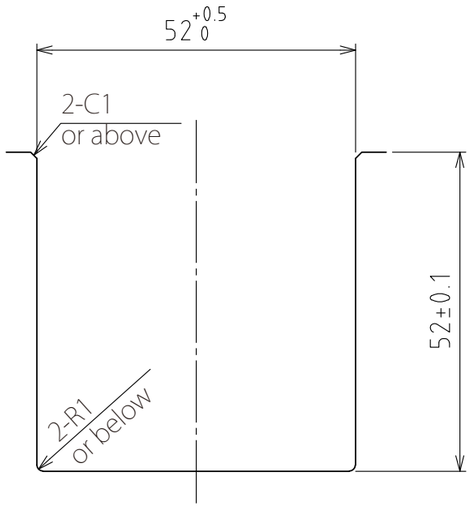

Recommended groove dimensions

(Scale 1:1)

spec

Series		AFU-5050W series
Freebear		5pcs
Material	Ball	SUJ2
	Ball seat	SCM415
	Body	Steel
Weight		5.2kg

	Air pressure [MPa(kgf/㎠)]	Load capacity (Unit) [kN(kgf)]	Load capacity (One freebear) [kN(kgf)]
Capacity	0.3 (3.1)	3.83(390.1)	0.77(78.0)
	0.4 (4.1)	5.10(520.1)	1.02(104.0)
	0.5 (5.1)	6.40(652.6)	1.28(130.5)
	0.6 (6.1)	7.65(780.1)	1.53(156.0)

設計 DESIGNED BY	古内	2021/07/28	名称 TITLE Pneumatically Actuated freebear unit
製図 DRAWN BY	古内	2021/07/28	
検図 CHECKED BY	技術部 '21.11.18 坂根	承認 APPROVED BY	技術部 21.11.26 花村
尺度 SCALE 1:3	サイズ SIZE A3		AFU-5050W-5
第三角法			
FREEBEAR		図面番号 DRAWING NO. SAU08404-F05	変更回数 REV.MARK