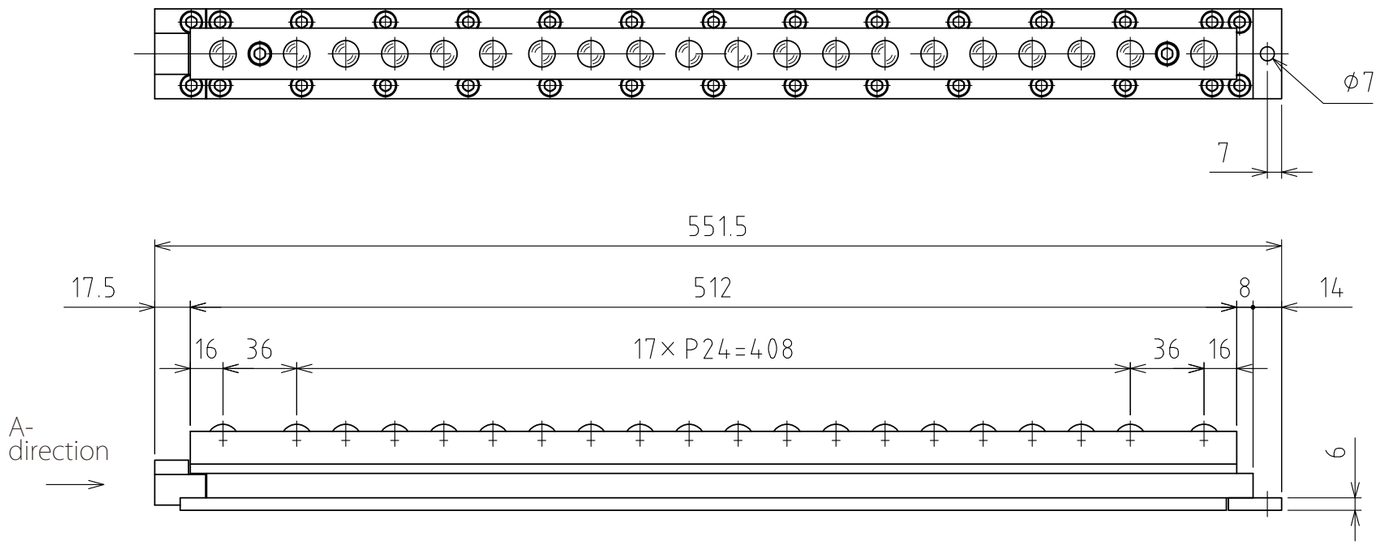

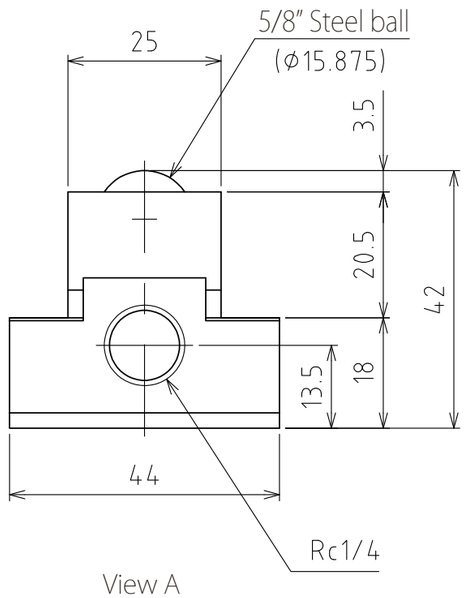

View A

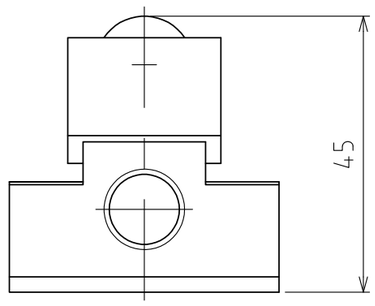

Rising
(stroke 3mm)

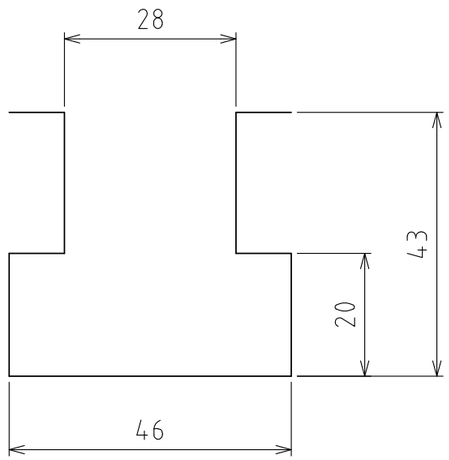

T-groove size

(Scale 1:1)

spec

Series		FAD28T series
Material	Ball	SUJ2
	Ball seat	SCM415
	Body	Steel
Means to lower the balls		Spring return system (lowers by exhausting)
Weight		4.8kg

	Air pressure [MPa(kgf/cm²)]	Load capacity (Unit) [kN(kgf)]
Capacity	0.3 (3.1)	2.46(250.1)
	0.4 (4.1)	2.94(299.8)
	0.5 (5.1)	3.92(399.8)
	0.6 (6.1)	4.91(500.1)

設計 DESIGNED BY	古内 2021/07/26	名称 TITLE	Pneumatically Actuated freebear unit
製図 DRAWN BY	古内 2021/07/26		
検図 CHECKED BY	技術部 '21.11.30 坂根	承認 APPROVED BY	技術部 21.11.30 花村
尺度 SCALE	1:3	サイズ SIZE	A3
第三角法		FAD28T-600	
FREEBEAR		図面番号 DRAWING NO.	SD-01416-F01
		変更回数 REV.MARK	