# HRT-6

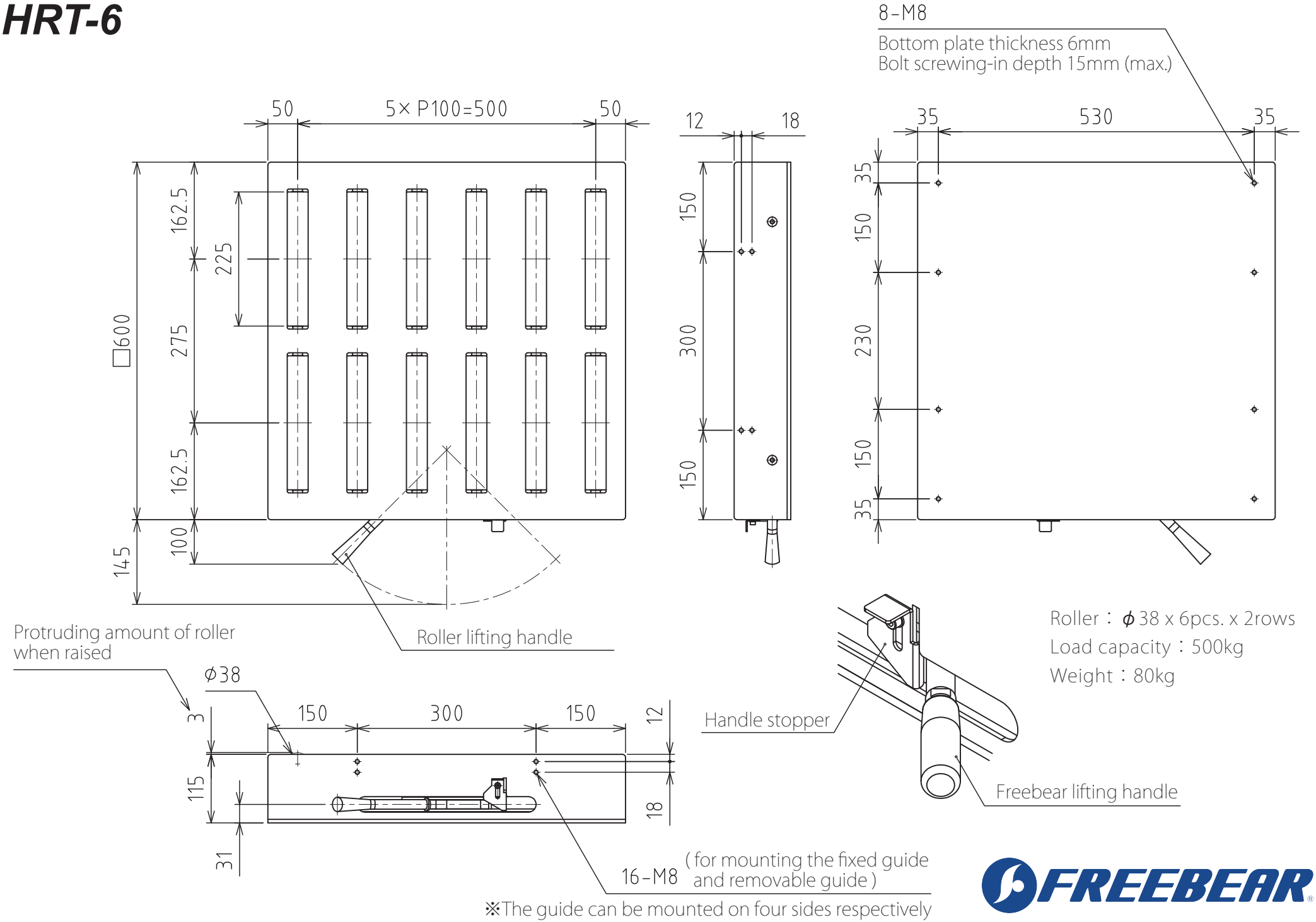
8-M8
Bottom plate thickness 6mm
Bolt screwing-in depth 15mm (max.)
50
5× P100=500
50
12
18
35
530
35
□600
162.5
225
275
162.5
100
145
150
300
150
35
150
230
150
35
Roller lifting handle
Protruding amount of roller when raised
φ38
3
150
300
150
12
115
18
31
16-M8
( for mounting the fixed guide and removable guide )
※The guide can be mounted on four sides respectively
Handle stopper
Freebear lifting handle
Roller : φ38 x 6pcs. x 2rows
Load capacity : 500kg
Weight : 80kg
FREEBEAR